ASSEMBLY INSTRUCTION

559-015

G 1pc

Headrest

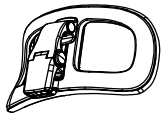

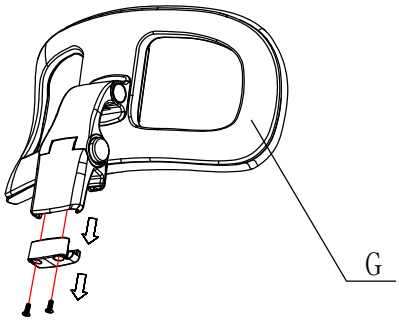

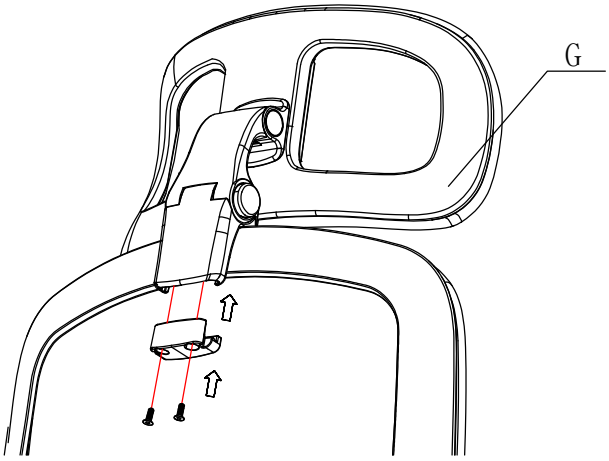

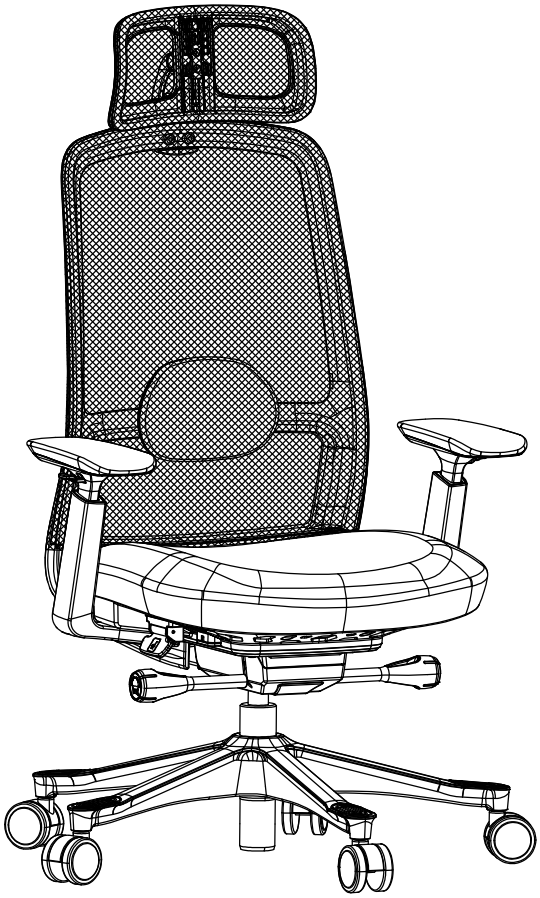

A 1pc

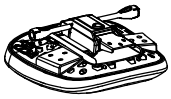

Seat

F 5pcs

Castors

B 1pc

Back

1 6pcs

Screw 6X45

C 1set

Armrests

2 6pcs

Washer 6X16

D 1pc

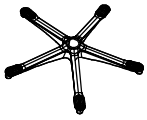

Base

3 3pcs

Screw 8X20

E 1pc

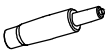
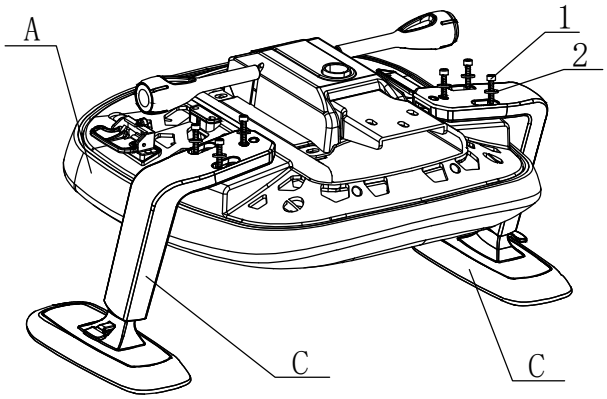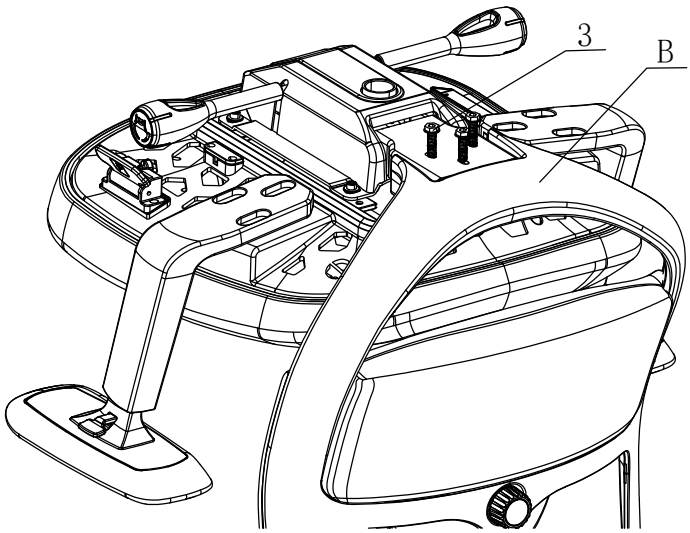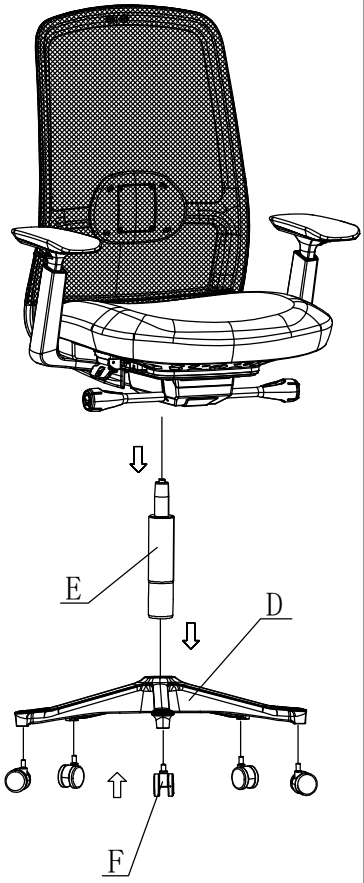
Gas Lift